Teleton

SERVICE MANUAL

12 Watt Solid State Stereo Hi-Fi Amplifier

MODEL A-300

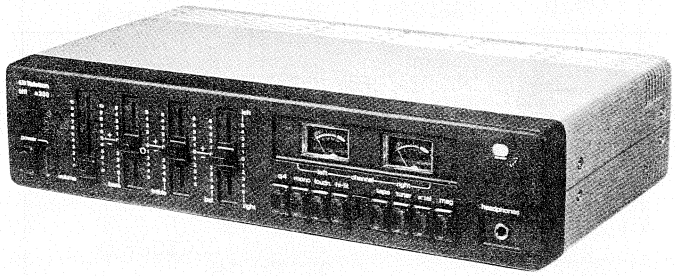

Germany: TELETON Elektro GmbH.
Oberhausener Str. 17 4000 Düsseldorf-Rath
Tel. (0211) 65 30 81 TX 858 6768

United Kingdom: TELETON Electro (UK) Co., Ltd.
Teleton House, Waterhouse Lane,
Chelmsford/Essex
Tel. Chelmsford 62 442 TX 99 338

Technical Service Organization
Waterhouse Lane, Chelmsford, Essex.
Tel. 0245-54621 TX 99338

Belgium: TELETON N.V.
2200 Borgerhout Belgium
Prins-Leopold-Straat 28
Tel. 03/361045 TX32508
03/357670

Netherlands: TELETON NEDERLAND B.V.
Marconiweg 10. Vianen
Tel. 03473-3744 TX 40581

France: TELETON Electro (France) S.à.r.l.
21 rue Paul Lafargue
94270 Le Kremlin-Bicêtre
Tel. 677 6934 TX24 468

Switzerland: TRANSACO AG
Kanzleistrasse 126 8004 Zürich
Tel. 39 45 60/23 50 40 TX 52 362

Specifications are subject to change without notice.

ALIGNMENT INSTRUCTION

Equipment required : (See Fig. 1 and 2)
Signal Generator (SG) : Output 1 kHz
with attenuator approx. 10mV – 500mV
R 10 kohm distortion 0.1%
Oscilloscope (OSC) : normal
Amperemeter (AM) : DC 0–100mA
Volt meter (VM) : DC 0–50V
Dummy load (R) : 8 ohm 5% 20W
For further checks
Distortion Meter (DM)
Audio-Voltmeter (AVM)

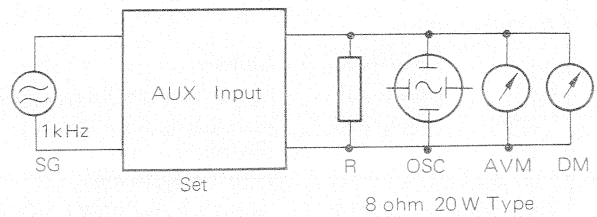

Fig. 1

STEP	OUTPUT	ADJUST	ADJUST FOR
1	0	VR301–L or VR302–R	Vc = 1/2 Vcc
2	0	VR303–L or VR304–R	IC = 17 mA
3	7–9 W	VR101–L or VR102–R	Symmetric sine wave as shown in Fig. 2
4	just 10W	VR101 VR102	VU Meter 0dB

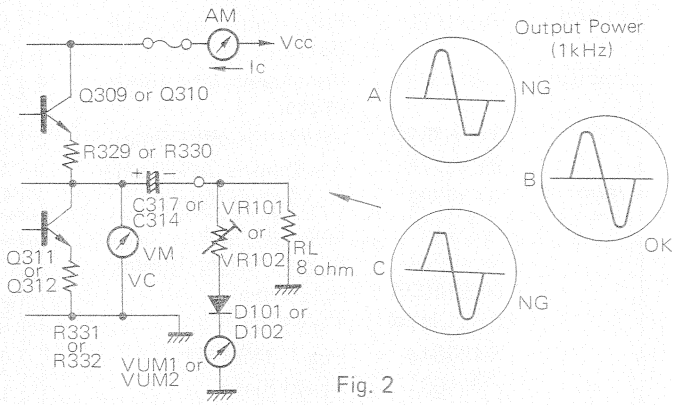

Fig. 2

Equalizer Amp P. C. Board(EQA–300)

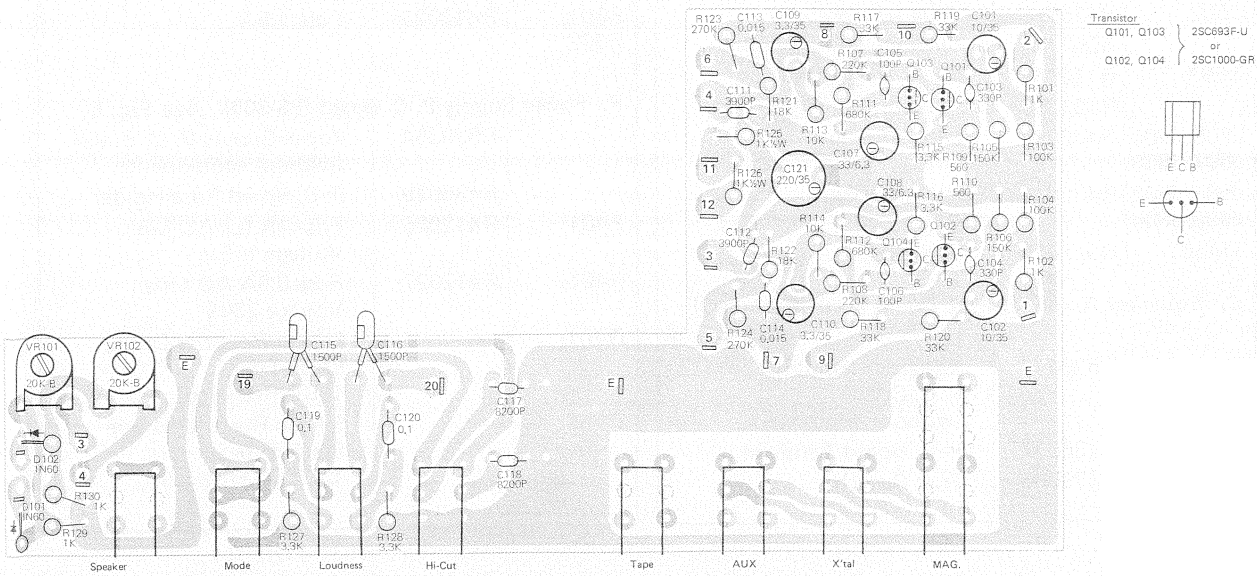

SPARE PARTS LIST

(Standard Parts Resistors, Capacitors are not listed here.)

Ref. No.	Part No.	Description
A. Cabinet		
	R840707	Upper Cabinet
	R840719	Lower Cabinet
	R811443	Upper Cabinet Sticking Piece
	R830595	Rubber Leg
	R651917	Cabinet Holder
	R871399	Slide Volume Knob
	R871405	Push Switch Knob
	R871388	Dummy Knob
	R811459	Power Indicator Pilot (Green)
	R840708	Front Panel
	H850286	P. S. Paper
	R851521	Slide Volume Mask
	R851534	Switch Cover
	R851535	Switch Cover (AC Power Switch)
	R890869	Name Plate
B. Chassis Parts		
	R610403	Chassis
S501	R429085	Power Switch (Push Type)
PL501	R411069	Pilot Lamp 12V 40mA (Power)
		Pilot Lamp Holder
ME1, ME2	R590074	Output Meter 650Ω 250μA
	R676227	Meter Spacer
PL502	R411070	Pilot Lamp 12V 40mA (Meter)
PL503	R411071	Pilot Lamp 12V 40mA (Meter)
	R676202A	Spacer (height 6.5mm)
	R633276	Headphone Jack Holder
J509	R439000	Headphone Jack
	A65412	Lead Clamper
	H810231	Spacer (height 12mm)
	R851402A	Fuse Fiber
	R651667A	Heat Sink
	R436044	Lug T-303 (6P)
	R651931	Shield Plate
	R440095	AC Line Cord
P501	R435007	AC Line Cord Plug (KEMA)
	R811474	Cord Stopper SN-4
S502	H425020	Slide Switch
	R851469	Slide Switch Stopper B
T501	R110162	Power Transformer
	R651709	Transformer Holder
J505, J506 J507, J508	R439038	DIN 2P Jack
J501, J502 J503, J504	R438012	DIN 5P Jack
TM501	R921022	GND Screw
C. Equalizer Amplifier P. C. Board Parts (EQA-300)		**See Fig. 3**
	R530449	Equalizer Amplifier P. C. Board (without component)
	R436031	P. C. Board Terminal
S101 ~ S105	R429086	Push Switch
Q101, Q102, Q103, Q104		Transistor 2SC693-F-U or 2SC1000-GR
D101, D102		Diode IN60
VR101 VR102	R382034	Semi-Fixed Resistor B B 20kΩ
D. Tone Control Amplifier P. C. Board (TOA-300)		**See Fig. 4**
	R530450	Tone Control Amplifier P. C. Board (without component)
Q201, Q202		Transistor 2SC536F or 2SC732-GR
VR201, VR202	R361155	B-50kΩ (Tone Control)
VR203	R361156	HB-50kΩ (Balance Control)
VR204	R361157	B-50kΩ With Center Tup (Volume Control)
E. Main Amplifier P. C. Board (MA-300)		**See Fig. 5**
	R530453	Main Amplifier P. C. Board (without component)
Q301, Q302		Transistor 2SC 536-F or 2SC732-GR
Q303, Q304		Transistor 2SC1175-F or 2SC 734-Y
Q305 Q306		Transistor 2SC1384-R or 2SC1384-Q
Q307 Q308		Transistor 2SA684-R or 2SA684-Q
Q309, Q310, Q311, Q312		Transistor 2SD313-D With Accessories
D301, D302		Silicon Varistor Diode MV-13
VR303, VR304,	R382021	Semi-Fixed Resistor B-500Ω
VR301 VR302	R382023	Semi-Fixed Resistor B-100kΩ
	H430028	P. C. Board Fuse Holder
F301, F302	R412006	Fuse 1.5A
F. Power Supply P. C. Board (PS-300)		**See Fig. 6**
	R530354	Power Supply P. C. Board (without component)
	R430028	P. C. Board Fuse Holder
F401	R412026	Fuse 1A for AC Line Voltage 115V
F401	R412027	Fuse 0.5A AC Line Voltage 230V
D201		Silicon Rectifier Diode Stack Type 10DC-R-2 (Red)
D202		Silicon Rectifier Diode Stack Type 10DC-N-2 (Black)

COMPONENT DIAGRAM(TOP VIEW)

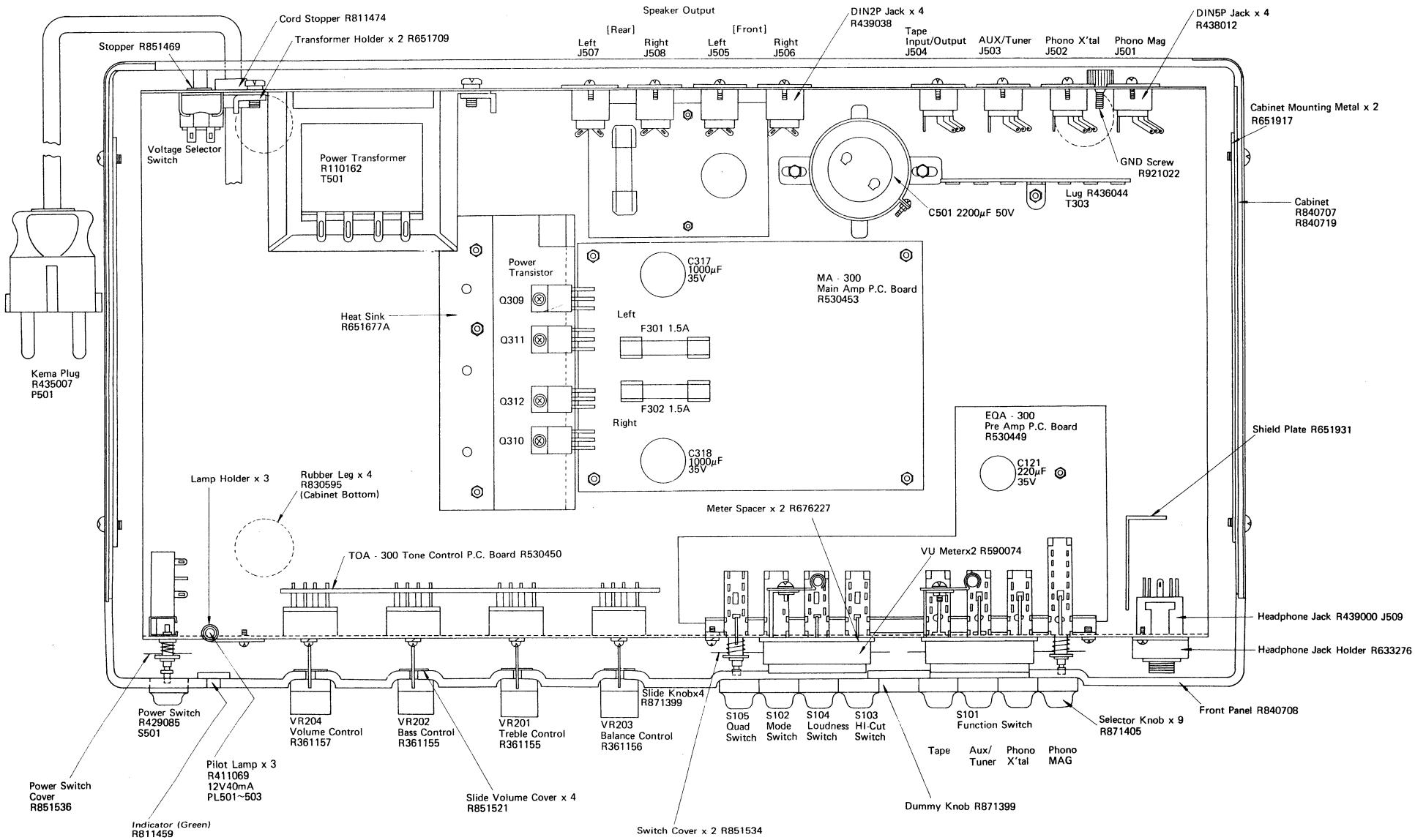

Tone Control Amp. P. C. Board(TOA-300)

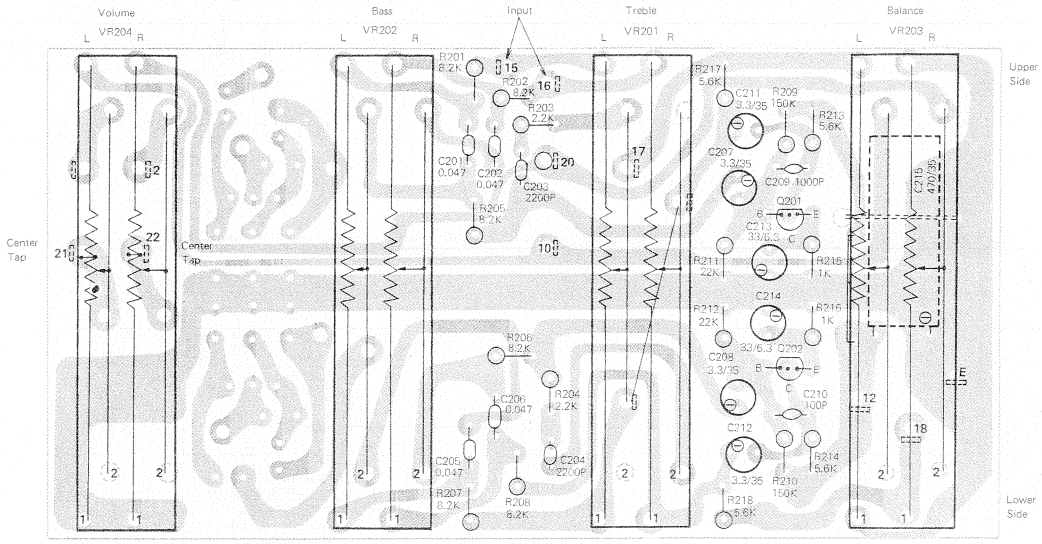

Transistor
Q201 Q202 2SC536F-W

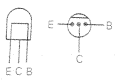

Fig.4

MAIN Amp. P. C. Boad(MA-300)

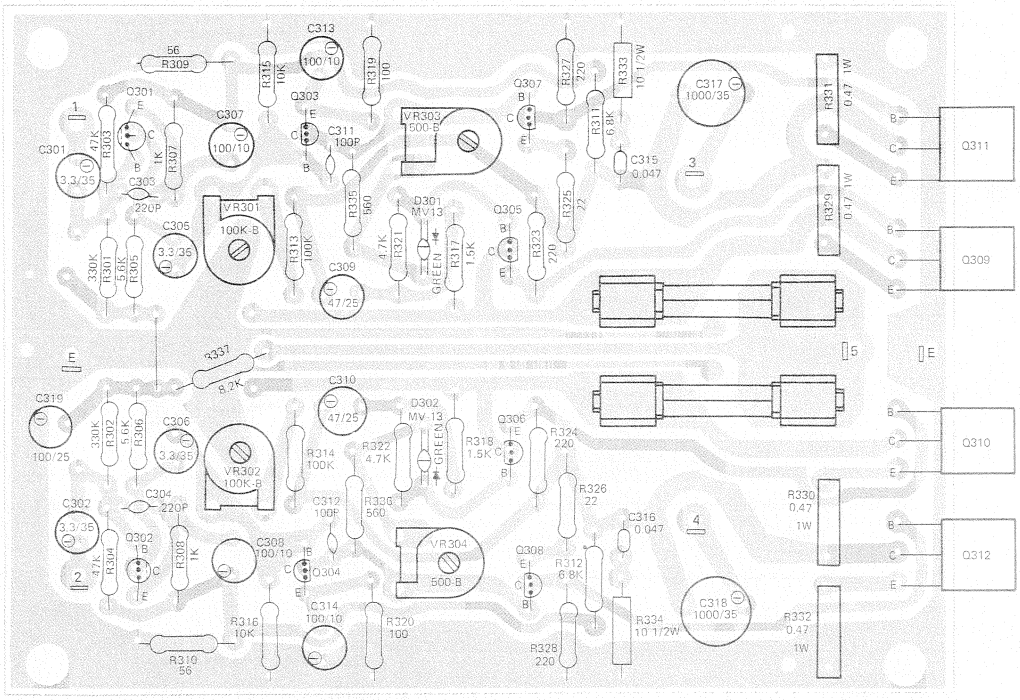

Transistor

Q301 Q302	2SC536F
Q303 Q304	2SC1175F
Q305 Q306	2SC1384R or Q
Q307 Q308	2SA684R or Q

Q301 Q302

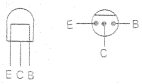

Q303 Q304 Q305 Q306 Q307 Q308

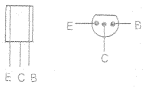

Fig. 5

Power Supply P. C. Board(PS-300)

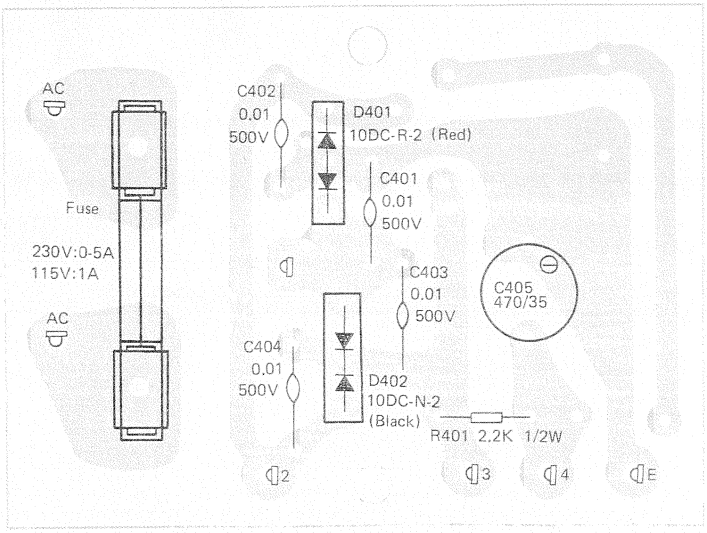

Fig. 6

SCHEMATIC DIAGRAM

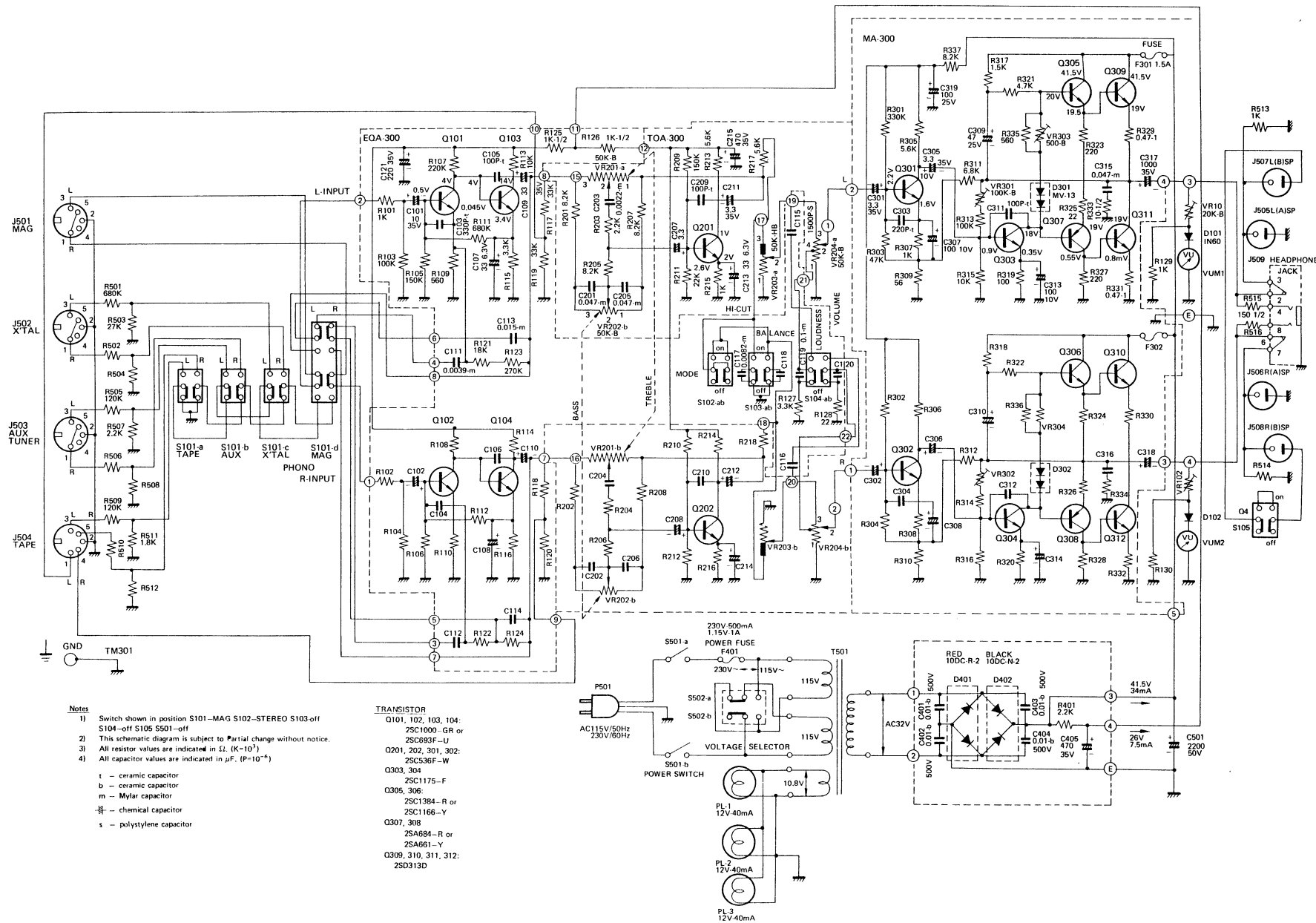

Notes

1) Switch shown in position S101–MAG S102–STEREO S103-off S104–off S105 S501–off
2) This schematic diagram is subject to partial change without notice.
3) All resistor values are indicated in Ω. ($K=10^3$)
4) All capacitor values are indicated in μF. ($P=10^{-6}$)

t – ceramic capacitor
b – ceramic capacitor
m – Mylar capacitor
– chemical capacitor
s – polystylene capacitor

TRANSISTOR

Q101, 102, 103, 104:
2SC1000-GR or
2SC693F–U
Q201, 202, 301, 302:
2SC536F–W
Q303, 304
2SC1175–F
Q305, 306:
2SC1384–R or
2SC1166–Y
Q307, 308
2SA684–R or
2SA661–Y
Q309, 310, 311, 312:
2SD313D